Flood Light Model-17

LMR-FL17-50W

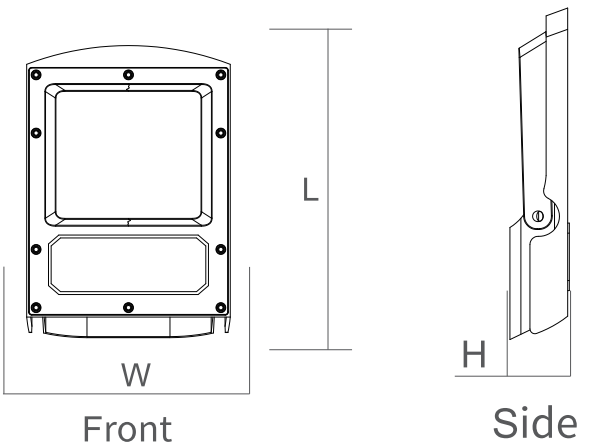

Overview

The LEMAR LIGHTING Flood Light Model-17 is a high-performance outdoor lighting solution designed for powerful illumination and durability. With a 90° beam angle, it ensures wide and efficient coverage. Made from robust aluminum and rated IP66, it withstands harsh weather conditions. Equipped with an external driver for better heat management and easy maintenance. Available in a range of color temperatures, warm white, cool white, and daylight, with a sleek grey finish, it's ideal for industrial and commercial applications.

Electrical Specifications

Model No.	TG-50W
Power	50W
Frequency	50/60 Hz
Voltage	85-265V
Power Factor (PF)	≥0.9

Light Specifications

Luminous Flux	6,500lm
Luminous Efficacy (rated)	130lm/W
Correlated Color Temperature (CCT)	3000K/4000K/6500K
Luminaire Light Beam Spread (Beam Angle)	90°
Color Rendering Index (CRI)	≥80

Mechanical Specifications

Housing Color	Grey
Material	Die-cast Aluminum
Dimensions (L*W*H)	140*200*35 mm
Working Temperature	-30℃ to +50℃
Ingress Protection Code (IP)	IP66

Performance Warranty

Warranty	3 Years
Lifespan	50,000Hrs

APPLICATIONS